District of Summerland

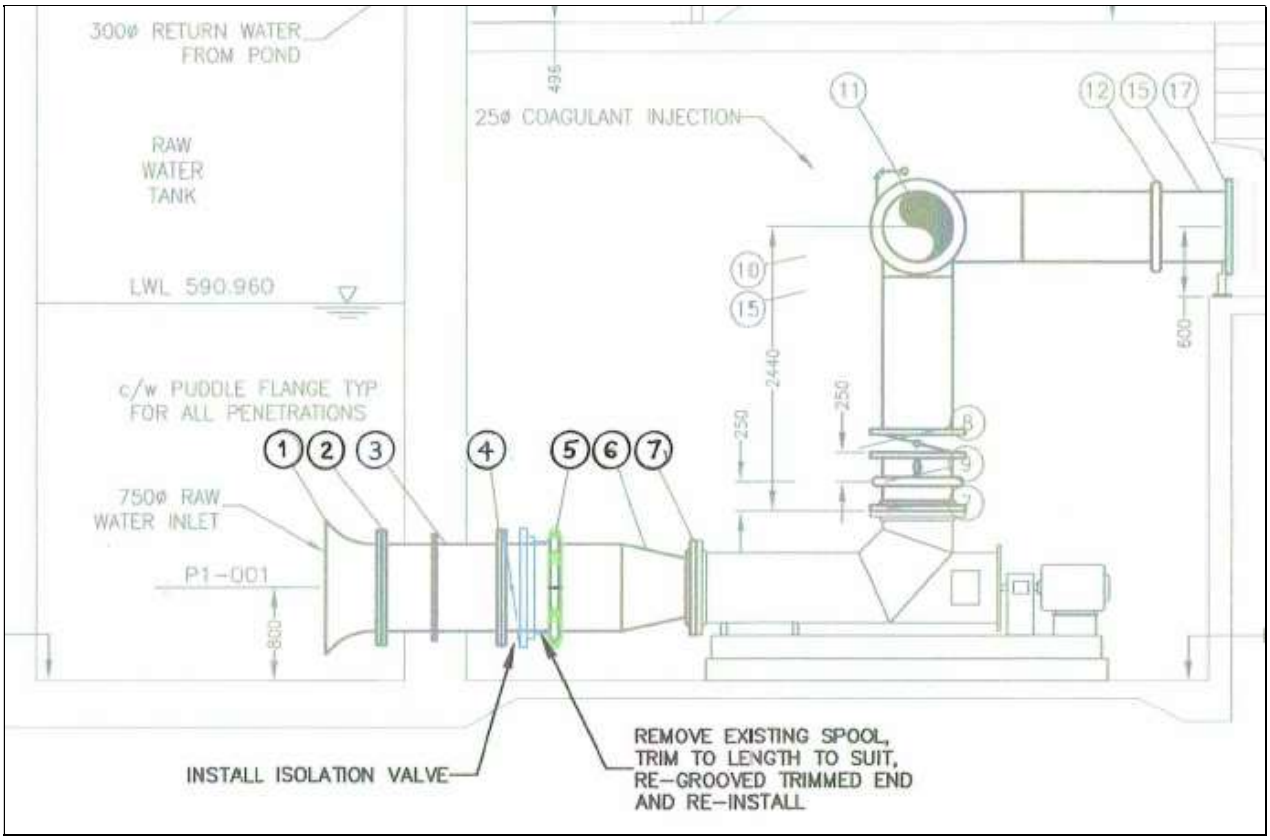

Water Treatment Plant
Raw Water Pump Isolation Valves

Tender Documents

Summerland - Contract No. 5330-148

November, 2017

Agua Consulting Inc
Agua Project No. 023-05.02

This page is intentionally left blank
as this document is designed for double-sided printing

Section No.	Description	No. of Pages
Division 0	**Contract**	
Section 00 01 10	Table of Contents	2
Section 00 11 16	Invitation to Bid	2
Section 00 21 13	Instruction to Bidders	6
Section 00 41 13	Stipulated Price – BID FORM	6
Section 00 50 00	Contract Agreement – Stipulated Price	8
Section 00 70 00	General Conditions of Contract - CCDC2	34
Section 00 73 03	Supplementary Conditions	4
Division 1	**General Requirements**	
Section 01 10 00	Summary of Work	4
Section 01 65 00	Equipment Installation	4
Section 01 77 00	Take-over Procedures	2

APPENDIX A	**Plan View and Section Drawings**
Figure 1	Option 1 - Dry Side Installation
Drawing P-01	Water Treatment Plant – Record dwg – Urban Systems Ltd.

APPENDIX B	**Owner Supplied Materials**
	Butterfly Valves and Hardware
	Adjustable Pipe Support Stands

This page is intentionally left blank to
accommodate double sided printing

The OWNER, the District of Summerland invites bids for:

Summerland Water Treatment Plant
RAW WATER PUMP ISOLATION VALVES

The CONSULTANT, Agua Consulting Inc. has prepared bid documents and specifications.

Date of Invitation to Bid is December 6, 2017

Your firm is invited to submit an offer under seal to the Owner location below before the bid closing time:

Time:	2:00 pm, local time,
Date:	Thursday December 21st, 2017
Location:	Summerland Public Works Yard Office 9215 Cedar Avenue, Summerland, BC

The project consists of:

- The installation of three 750mm diameter Owner Supplied butterfly valves, the fabrication of pipe spools and associated works within the Summerland Water Treatment Plant;
- Supply and installation of miscellaneous components listed in these specifications and on the contract drawings.

Bid documents for a stipulated price contract may be obtained electronically at the District of Summerland website, starting at 1:00 pm, December 6, 2017. Tender documents are also available at the BC Bid site at www.bcbid.ca after December 6, 2017.

A security deposit in the amount of 10% of the Total Tender price is required in the form of a Bid Bond or Certified Cheque for the bid submission. Consent of Surety is required within the bid submission. Submit your offer on the Bid Form provided. Refer also to the bidding requirements described in the document in 00 21 13 Instructions to Bidders, and other supporting bid documents.

The Owner reserves the right to accept any compliant offer or reject all offers, at their sole discretion.

A site inspection and project pre-tender meeting is scheduled for Thursday, December 14, 2017 at 1:00 p.m. at the Summerland Water Treatment Plant.

General enquiries related to the project can be directed to the contact names below. Administrative enquiries may be directed to Devon Van der Meulen at the District office. Technical enquiries can be directed to either Mr. Bob Hrasko, P.Eng. of Agua Consulting Inc.

Owners Representative
Agua Consulting Inc.
Mr. Bob Hrasko, P.Eng.
3660 Anderson Road
Kelowna, BC V1X 7V8
Cell (250) 212-3266
Email rhrasko@shaw.ca

Owner
District of Summerland
Mr. Devon Van der Meulen
Manager Works and Utilities
9215 Cedar Avenue
Summerland, BC
Phone (250) 404-4075
Email dvandermeulen@summerland.ca

Blank Page

PART 1 GENERAL

1.1 BID CALL

.1 Offers signed under seal, executed, and dated will be received by the Owner:

.1 Located at 9215 Cedar Avenue, Summerland, BC.

.2 Before 14:00:00 local time on the 21st day of December, 2017.

.3 The time piece at the location for receiving bids shall be the only measure for the exact time.

.2 Offers submitted after the above time shall be returned to the bidder unopened.

.3 Offers will be opened at 14:00 hrs on the 21st day of December, 2017, at the office of the Owner

.4 Amendments to the submitted offer will be permitted if received in writing with date-time prior to bid closing and if endorsed by the same party or parties who signed and sealed the initial offer.

1.2 BID INTENT

.1 The intent of this bid call is to obtain an offer to perform work to complete the "*Summerland Water Treatment Plant – Raw Water Pump Isolation Valves*" project, located at 16700, Prairie Valley Road, under a Stipulated Price contract, in accordance with the Contract Documents.

.2 Perform the Work within the time stated in Section 01 10 00 - Summary of Work within 8 calendar weeks from the Notice to Proceed.

1.3 CONTRACT DOCUMENTS IDENTIFICATION

.1 The Contract Documents are identified as Summerland Contract No.5330-148, and listed in the Table of Contents.

1.4 BID AND CONTRACT DOCUMENTS

.1 Bid Documents: The Contract Documents supplemented with Instructions to Bidders, Bid Form and Bid Supplementary Forms identified.

.2 Contract Documents: Defined in:

.1 CCDC 2e-2008 - Stipulated Price Contract

1.5 DEFINITIONS

.1 The term: Bid, Offer, or Bidding: An act of submitting an offer under seal.

.2 The term: Bid Price: Monetary sum identified by the Bidder in the Bid Form.

1.6 DOCUMENT AVAILABILITY

.1 Bid Documents may be obtained on-line from the website of the Owner, located on the internet at

www.summerland.ca/business-economy/bid-opportunities

.2 Bid Documents are made available only for the purpose of obtaining offers for this project. Their use does not confer a license or grant for other purposes.

.3 Upon receipt of Bid Documents verify that documents are complete; notify Consultant should the documents be incomplete.

.4 A copy of the project materials submittals reviewed by Summerland is bound in the Bid Documents and included as Appendix B.

.5 Immediately notify the Consultant upon finding discrepancies or omissions in the Bid Documents.

1.7 DOCUMENT EXAMINATION

.1 Document Examination:
Electronic Bid Documents may be viewed from the above internet address.

.2 Upon receipt of Bid Documents verify that documents are complete; notify Consultant should the documents be incomplete.

.3 Immediately notify the Consultant upon finding discrepancies or omissions in the Bid Documents.

1.8 QUERIES/ADDENDA

.1 Direct questions to

Administrative Questions	Technical Questions
Mr. Devon Van der Meulen	Mr. Bob Hrasko, P.Eng.
Manager Works and Utilities	Project Manager
District of Summerland	Agua Consulting Inc.
E-mail: dvandermeulen@summerland.ca	rhrasko@shaw.ca
Phone (250) 404-4075	(250) 212-3266

.2 Addenda may be issued during the bidding period. All addenda become part of the Contract Documents. Include costs in the Bid Price.

.3 Verbal answers are only binding when confirmed by written addenda.

.4 Clarifications requested by bidders must be in writing not less than seven days before date set for receipt of bids. The reply will be in the form of an addendum, a copy of which will be forwarded to known bidders.

1.9 BIDDERS BRIEFING

.1 It is recommended that the Contractor visit the project site before submitting a bid.

.2 A bidders briefing has been scheduled for 13:00 hours, local time, on the 14th day of December, 2017, at the location of the Summerland Water Treatment Plant.

.3 All general contract bidders and suppliers are invited.

.4 Representatives of the Owner and Consultant will be in attendance.

.5 Summarized minutes of this meeting will be circulated to all known bidders. These minutes will form part of the Contract Documents.

.6 Information relevant to the Bid Documents will be recorded in an Addendum and issued to known bidders, and listed as supplemental documents on the Summerland bidders website.

1.10 PREQUALIFICATION

.1 Any bidder, if specifically requested, by the Owner or Consultant, shall complete and submit CCDC 11 - Contractors Qualification Form to the Consultant and Owner on or before 1:00 pm local time on the 15th day of December, 2017.

.2 Acceptance or rejection of this submittal will be made within forty-eight (48) hours thereafter.

1.11 SUBCONTRACTORS

.1 The Owner as further described in the General Conditions reserves the right to reject a proposed subcontractor for reasonable cause.

.2 Refer to CCDC 2e as to Owner rights to accept or dismiss subcontractors.

1.12 BID INELIGIBILITY

.1 Bids that are unsigned, improperly signed or sealed, conditional, illegible, obscure, contain arithmetical errors, erasures, alterations, or irregularities of any kind, may at the discretion of the Owner, be declared non-compliant.

.2 Bid Forms and enclosures which are improperly prepared may at the discretion of the Owner, be declared non-compliant.

.3 Bids which contain qualifying conditions or otherwise fail to conform to these Instructions to Bidders may be disqualified or rejected. Bids are by invitation only, from Owner selected bidders. Bids from unsolicited bidders may be returned un-opened.

.4 The Owner shall however, in its sole discretion, reject or retain for its consideration, bids which are non-conforming because they do not contain the content or form required or for failure to comply with the process for submission as set out in these Instructions to Bidders.

.5 Failure to provide security deposit, bonding or insurance requirements shall at the discretion of the Owner, be declared informal.

1.13 BID SUBMISSIONS

.1 Bidders shall be solely responsible for the delivery of their bids to the instructions herein, in the manner and time prescribed.

.2 Submit one (1) copy of the executed offer on the Bid Forms provided, signed and corporate sealed together with the required security in a closed opaque envelope, clearly identified with bidders name, project name and Owners name on the outside cover of the submission.

.3 Insert the closed and sealed Bid Form envelope and requested security deposit in a larger opaque envelope, and label this envelope as noted above.

.4 Improperly completed information, irregularities in the security deposit may be cause not to open the bid envelope and declare the bid invalid or informal.

.5 An abstract of submitted bids may be made available to bidders following bid opening.

1.14 SECURITY DEPOSIT

.1 Bids shall be accompanied by a security deposit as follows:

.1 Bid bond or certified cheque in the amount of not less than 10% of the bid price.

.2 Endorse the Bid Bond or Certified Cheque in the name of the Owner as obligee, signed and sealed by the principal (Contractor) and surety.

.2 Use Bid Bond Form CCDC 220.

.3 The security deposit will be returned after delivery to the Owner of the required Performance and Labour and Materials Payment Bond(s) by the accepted bidder.

.4 If no contract is awarded, all security deposits will be returned.

1.15 CONSENT OF SURETY

.1 Submit with the Bid Form and Bid Bond, a Consent of Surety, stating that the surety providing the Bid Bond is willing to supply the Performance and Labour and Materials Payment Bond required.

.2 Include the cost of bonds in the Bid Price.

1.16 PERFORMANCE ASSURANCE

.1 The accepted bidder shall provide a Performance and Labour and Materials Payment bond as described in the Supplementary Conditions.

.2 Include the cost of bonds in the Bid Price.

1.17 INSURANCE

.1 Provide a signed "Undertaking of Insurance" on a standard form provided by the insurance company stating the bidder’s intention to provide insurance to the Owner in accordance with the insurance requirements of the Contract Documents.

1.18 BID FORM REQUIREMENTS

.1 Completion of Work:

.1 The bidder, in submitting an offer, agrees to complete the Work by the date indicated in the Contract Documents. The Bidder may suggest a revision to the Contract Time with an adjustment to the Bid Price, but requires pre-approval by the Owner.

.2 The Owner requires the work of this contract be completed as quickly as possible and consideration will be given to time of completion when reviewing the submitted bids.

.3 Refer to Supplementary Conditions for inclusion of taxes and procedures for tax rebate claims by the Owner.

1.19 FEES FOR CHANGES IN THE WORK

.1 Include in the Bid Form, the overhead and profit fees applicable for changes in the Work, whether additions to or deductions from the Work on which the Bid Price was based.

.2 Include in the Bid Form, the fees proposed for subcontract work for changes (both additions and deductions) in the Work.

.3 The Contractor shall apply fees as noted, to the subcontractor's gross (net plus fee) costs on additional work.

1.20 BID SIGNING

.1 The Bid Form shall be signed under seal by the bidder.

.2 Sole Proprietorship: Signature of sole proprietor in the presence of a witness who will also sign. Insert the words "Sole Proprietor" under the signature. Affix seal.

.3 Partnership: Signature of formal sharing partners in the presence of a witness who will also sign. Insert the word "Partner" under each partner signature.

.4 Limited Company: Signature of a duly authorized signing officer(s) in their normal signatures. Insert the officer's capacity in which the signing officer acts, under each signature. Affix the corporate seal.

.5 Joint Venture: Each party of the joint venture shall execute the Bid under their respective seals in a manner appropriate to such party as described above, similar to the requirements of a Partnership.

1.21 APPENDICES TO THE BID FORM

.1 Appendix 'A' - Contract Documents: A complete listing is scheduled in these Contract Documents - Table of Contents. This should include a complete listing of all documents and information issued, on which the Bid Price was derived.

.2 Appendix ‘B' - Stipulated Prices: Include a listing of stipulated prices specifically requested by the Contract Documents.

1.22 DURATION OF OFFER

.1 Bids shall remain open to acceptance and shall be irrevocable for a period of thirty (30) days after the bid closing date.

1.23 ACCEPTANCE OF OFFER

.1 The Owner reserves the right in its absolute discretion to accept any bid which it deems most advantageous to itself and the right to reject any or all bids, in each instance without giving such formal notice.

.2 The lowest or any bid will not necessarily be accepted. In no event will the Owner be responsible for the costs of preparation or submission of a bid.

.3 After acceptance by the Owner, the Consultant on behalf of the Owner, will issue to the successful bidder, a written “Notice to Proceed”.

.4 After a bid has been accepted, all rejected bids will be returned to the respective bidders with submitted bid securities and other requested enclosures.

END OF SECTION

THIS PAGE IS INTENTIONALLY LEFT BLANK FOR DUPLEX PRINTING

PART 1 GENERAL

1.1 BID INFORMATION

Date: _____

Submitted by: _____

(name) _____

(address) _____

_____

To: District of Summerland

Project: Summerland Water Treatment Plant, Raw Water Pump Isolation Valves
Summerland – Contract No. 5330-148

1.2 OFFER

.1 Having examined the Place of The Work and all matters referred to in the Instructions to Bidders and the Contract Documents prepared by the named (Consultants) for the above mentioned project, we, the undersigned, hereby offer to enter into a contract using CCDC 2-2008 Contract form, to perform the Work for the price of:

$ _____

_____
dollars, in lawful money of Canada.

.2 We have included herewith, the required security deposit or Bid Bond, and Consent of Surety as required by the Instruction to Bidders.

.3 Taxes:

.1 Applicable federal tax,GST, is included separately in stated Bid Price.

.2 Applicable provincial taxes, PST is included in the Bid Price.

1.3 ACCEPTANCE

.1 Refer to Section 00 21 10 - Instructions to Bidders for Conditions of acceptance.

.2 This offer shall be open to acceptance and is irrevocable for thirty (30) calendar days from the Bid closing date and time.

.3 If this Bid is accepted by the Owner within the time period stated above, they will:

.1 Execute the 'Agreement' within seven (7) days of receipt of the form of execution.

.2 Furnish the required bonds within seven (7) days of receipt of the Agreement in the form described in the Supplementary Conditions.

.3 Commence work within 15 days after written notification of acceptance of this bid.

.4 Complete the Work within 6 calendar weeks from notification of acceptance of this Bid and no later than March 9, 2018.

.4 If this Bid is accepted within the time stated herein, and we fail to commence the Work or we fail to provide the required Bond(s), the security deposit shall be forfeited as damages to the Owner by reason of our failure, limited in amount to the lesser of the face value of the deposit or the difference between this Bid and the Bid which the Contract is signed.

.5 In the event our Bid is not accepted within the time stated above, the required security deposit shall be returned to the undersigned, in accordance with the provisions in the Instructions to Bidders; unless a mutually satisfactory arrangement is made for its retention and validity for an extended period of time.

1.4 APPENDICES

.1 A list of the Contract Documents is appended hereto and identified as 'Appendix A'.

.2 A list of Stipulated Prices is appended hereto and identified as 'Appendix B'.

1.5 ADDENDA

.1 The following Addenda have been received. The modifications to the Contract Documents noted therein have been considered and all costs thereto are included in the Bid Price.

.1 Addendum # _____ Dated _____.

.2 Addendum # _____ Dated _____.

.3 Addendum # _____ Dated _____.

.4 Addendum # _____ Dated _____.

1.6 CHANGES

.1 When the Consultant establishes that the method of valuation for Changes in the Work will be net cost, plus a percentage fee in accordance with CCDC 2 - Article GC 12.1 – Indemnification of the General Conditions, our percentage fee will be:

.1 Where direct costs are less than or equal to $5,000.00:

.1 Our overhead on the net cost of our own work shall be 10%, and

.2 our profit on the net cost of our own work shall be 5%.

.2 Where direct costs are in excess of $5,000.00:

.1 our overhead on the net cost of our own work shall be 5%, and

.2 our profit on the net cost of our own work shall be 5%.

1.7 BID FORM SIGNATURE(S)

The Corporate Seal of

_____
(Bidder - please print)
was here-unto affixed in the presence of:

(Seal)

Authorized signing officer	Title

Authorized signing officer	Title

If this Bid is a joint venture or partnership, add additional forms of execution for each member of the joint venture on the appropriate form or forms, as above.

Appendix A: The following is the list of **Contract Documents** referred to in the Bid Form submitted by:
(Bidder)

(Owner) The list of Owner provided Contract Documents includes the following:

.1 Documents and Specifications cited in the Table of Contents at the beginning of Tender Documents.

.2 Drawing, Figure 1, cited as Appendix A of the Tender Document package.

.3 Submittals provided to suppliers, cited as Appendix B of the Tender Document package.

dated _____ to which this Appendix is an integral part of the Bid Form.

Appendix B - Stipulated Prices: The following is the list of Stipulated Prices referred to in the Bid Form submitted by:

(Bidder) _____

dated _____ to which this Appendix is an integral part of the Bid Form.

The following are incidental Unit Prices for specific portions of the Work as listed, and are applicable to authorized variations from the Contract Documents.

Item of Work	**Quantity Unit**	**Stipulated Price**
Valve removals and blind flange installations	3	$
Materials/Spool fabrication	3	
Valve Installations and Commissioning	3	
SUBTOTAL		
TAXES		
TOTAL TENDER PRICE		$

END OF BID FORM - STIPULATED PRICE DOCUMENT

1) GENERAL

The Canadian Construction Documents Committee, Standard Construction Document CCDC 2 – Stipulated Price Contract, 2008, is hereby modified as follows:

B.C. BUILDERS LIEN LEGISLATION

Wherever the *General Conditions* of the Contract refer to "applicable lien legislation", it shall mean the *BC Builders Lien Act* as revised by Bill C38 in 1997. If there is any disagreement between the *General Conditions* of the *Contract* and the *BC Builders Lien Act*, the latter shall govern.

2) GENERAL CONDITIONS

ARTICLE A-5

Revise Section 5.1. Add subsection 5.1.4 as follows:

"5.1.4 withhold ten percent (10%) of each progress payment to be held in a holdback trust account."

DEFINITIONS

Substantial Performance of the Work

.1 The work is substantially performed when:

"when the Work, or a substantial part thereof, has passed inspection and testing and is ready for use or is being used for the intended purposes, and:

ADD TO DEFINITIONS

Addendum *Addendum* means an addition to or a change in the Contract Documents that is issued by the Consultant prior to the tender closing.

Payment Certifier The Consultant is the *Payment Certifier* for this project, as required by the Builder's Lien Act.

Place of Work Add "The place of work is defined as
" 16700 Prairie Valley Road, Summerland, BC"

Total Performance of the Work *Total Performance of the Work* means when the entire Work, except those items arising from the provisions of GC 12.3 – WARRANTY, have been performed to the requirements of the Contract Documents and is certified by the Consultant.

GC 1.1 - CONTRACT DOCUMENTS

.1 CCDC 2-2008, Paragraph 1.1.7: Revise this paragraph on Precedence of Documents, as follows:

.1 In the event of conflict within and between the Contract Documents, the order of priority within specifications and drawings are - from highest to lowest:

.2 The Agreement between the Owner and the Contractor.

.1 Supplementary Conditions.

.2 The General Conditions.

.3 Division 1 of the Specifications.

.4 Technical Specifications:

.1 Divisions 2 through 49 of the Specifications.

.2 Specifications specifically indicated on Drawings.

.5 Material and finishing schedules and keynotes:

.1 Schedules within the Specifications.

.2 Schedules on Drawings.

.6 Drawings:

.1 Drawings of larger scale shall govern over those of smaller scale of the same date.

.2 Dimensions shown on Drawings shall govern over dimensions scaled from Drawings.

.3 Location of utility outlets indicated on architectural detail Drawings takes precedence over positions or mounting heights located on mechanical or electrical Drawings.

.7 Later dated documents shall govern over earlier documents of the same type.

.3 In the event of conflict between documents, the decision of the Owner shall be final.

.4 The requirements stated in Division 01 specification sections apply to all other specification sections within Division 02 to 49. Refer to precedence statements above.

.2 Amend Clause 1.1 by the addition of the following:

1.1.12 *Record Drawings* The Contractor shall keep one set of Contract Drawings on the site at all times. As the work progresses, they shall record in a neat legible manner, all changes in the work. The following information shall be recorded for each change.

i) Full Description of Change

ii) Date

iii) Authority

1.1.13 At the completion of Work, a clean red-line set of drawings shall be forwarded to the Consultant for incorporation into a set of “Record Drawings” for this project.

GC 5.3 PROGRESS PAYMENT

.1 Replace 5.3.1 with the following clause below.

The Owner shall make payment to the Contractor on account as provided in Article A-5 of the Agreement – Payment no later than 30 days after the date of Certificate for Payment issued by the Consultant.

.1 The Contractor shall provide the Consultant with satisfactory evidence in the form of a WCB Certificate of Clearance that they have made suitable provision for meeting the liability under the Workman's Compensation Act of BC, prior to the release of any monthly progress payment.

.2 The Contractor shall provide the Consultant with a Statutory Declaration that all liabilities incurred by the Contractor and its Subcontractors in carrying out the Contract have been discharged and that all liens in respect of the Contract have expired or have been satisfied, discharged or provided for by payment. The Statutory Declaration shall be provided prior to all monthly progress payments except the first one.

.3 In addition to any other holdback required by statute or otherwise agreed by the Parties, the Owner will retain, until expiry of the warranty referred to in GC 12.3, money in the amount calculated pursuant to paragraphs (1) and (2) hereof which money may be applied by the Owner in whole or in part in order to reimburse the Owner for losses, costs incurred or funds expended by the Owner as a result of default by the Contractor respecting the warranty obligations of the Contractor.

.4 The maintenance period obligations will be maintained in the form of extension of the Performance Bond for the duration of the warranty period.

GC 5.10 COMPENSATION TO OWNER FOR EXTENSION OF TIME

.1 *Add new clause GC 5.10.1 as follows:*

"In the case the Work is not completed within the Contract Time, the Owner may extend the date of Substantial Performance of the Work. If the time limit is extended, and it is determined that the reasons for delays are solely due to the responsibilities of the Contractor, the Owner shall have the right to charge the Contractor and to deduct from the final payment the actual costs to the Owner for additional engineering, inspections, superintendence and other overhead expenses as set out in the Contract Documents."

GC 11.1 - INSURANCE

.1 Provide construction insurance to requirements of CCDC 41 - CCDC Insurance Requirements.

GC 11.2 CONTRACT SECURITY

.1 *Section GC 11.2 is amended with the addition of the following:*

11.2.1 The Contractor, together with the Surety Company approved by the Owner and authorized by law to carry on business within this Province, shall furnish a "Performance Bond" in the name of the Owner for Fifty (50) percent of the Contract Price to assure the Contractor completes performance of the Work on the standard bond form, Canadian Construction Documents Committee, Document No. 22, latest edition. The bond shall remain in effect until 12 months after the date the Consultant accepts the entire work.

11.2.2 The Contractor, together with the Surety Company approved by the Owner and authorized by law to carry on business within this Province, shall furnish a "Labour and Material Payment Bond" in the name of the Owner for Fifty (50) percent of the Contract Price to assure the Contractor makes payment to all parties directly contracted to him on the standard bond form, Canadian Construction Documents

Committee, Document No. 22, latest edition. The bond shall remain in effect until 12 months after the date the Consultant accepts the entire work.

GC 12.3 WARRANTY

.2 *Add the following Clause to Subsection 12.3:*

12.3.7 Any defective item of equipment necessitating substantial repairs or replacement within the Warranty Period shall be subject to further Warranty Period of 12 months from the time of repair completion and accepted commissioning of the replacement parts. The cost associated with the extended warranty shall be borne by the Contractor.

END OF SECTION

1. GENERAL

1.1 Section Includes

.1 Description of Works

.2 Project Schedule

.3 Work Sequence

.4 Contractor Use of Premises

.5 Project Constraints

.6 Owner Supplied Products

.7 Contractor Supplied Products

1.2 Description of Works

.1 The District of Summerland requires a Mechanical / Civil Contractor to install three 750mm diameter butterfly valves at the Summerland Water Treatment Plant (WTP). The valves are to be installed ahead of the supply pumps at the head of the water treatment process. The purpose of the valves is to be able to isolate any of the three supply pipes entering the plant and allow Summerland staff to isolate and serviced any of the three raw water intake pumps.

.2 An illustration of the required work is provided in Figure 1 in Appendix A of this tender document;

.3 The objective of this contract is set the basis for a fixed price contract to provide a complete job to isolate each process train, remove the existing pipe-works, fabricate new spools and install new pipe and valve for each of the three process trains.

.4 Close coordination with District of Summerland Water Treatment Plant staff is required in order to schedule work with temporary disruption of raw water supplied to the Summerland water treatment plant. A maximum shut-down duration of 8 hours can be permitted at any one time;

.5 A list of Owner supplied materials is provided in this section. See Appendix B for the engineer approved shop drawings of the materials.

.6 The contractor will be expected to provided temporary blind flanges in the 750mm diameter size so that the water system can be isolated during shut downs;

.7 Keep the work site clean and take precautions so that no debris or contaminants enter the pipe surfaces. Seal off open pipe sections if left in open condition for a long duration;

.8 Testing of joint integrity will be by means of visible inspection. No dampness or drips will be permitted at the flanged or rolled-grooved joints;

.9 Disinfection of new valve and pipe works will be by means of swabbing the pipe and valve interior components with sodium hypochlorite solution prior to final connection being made.

1.3 Project Schedule

.1 Begin the work at the earliest possible date respecting signing and administrative requirements

.2 Provide Consultant and Summerland Owners Representative with 2 weeks' notice of when the first WTP shut down is planned;

.3 Provide schedule for the work to Consultant and Owner for work including definite times for disruption of water supply to WTP;

.4 Substantially complete the work within 8 calendar weeks of the date of award as per the Tender Form.

1.4 Work Sequence

.1 Construct the work in stages to accommodate Summerland use of premise during construction.

.2 Carry out works in order in a manner to expedite construction. Following is a possible work sequence.

The work is expected to proceed in the following manner:

i) Preparation and field measurement of components confirming lengths, bolt patterns, materials and receipt of owner supplied products;
ii) Shut down of raw water supply to WTP and removal of the spools from the 1st and 2nd process trains;
iii) Fabrication of spools for process trains No. 1 and 2;
iv) Shut down of raw water supply to WTP and reinstallation of spools and new Butterfly valves to the 1st and 2nd process trains. At same time remove the 3rd process service train spool for fabrication;
v) Fabrication of third process train spool;
vi) Shut down of raw water supply to WTP. Installation of fabricated spool and new butterfly valve to the third process train;
vii) Commissioning of newly installed equipment and demonstration of valve function.

1.5 Contractor Use of Premises

.1 Ensure that Summerland has access to all equipment within their intake pump room at all times. Coordinate access to WTP with Summerland WTP staff. A Summerland WTP Operator must be on-site at all times during construction.

.2 The Contractor shall restrict use of the site to areas within the limits of work and shall not disturb the building areas outside the area designated for work;

.3 Contractor shall limit use of premises for Work, for storage, and for access, to allow:

.1 Existing owner access at all times;

.2 Work by Summerland WTP Operators on existing water system components (Owner).

.3 Work hours are limited to the current WTP normal working hours or from 7:00 a.m. to 4:00 pm week days. Special arrangements may be made if it is necessary if work is required to extend beyond normal working hours.

1.6 Project Constraints

.1 The District of Summerland domestic water customers must receive uninterrupted water service at all times. Summerland has 4,710 m3 of storage within the WTP clearwell, of which a significant portion of the water, 3,000 m3 is dedicated to water for fire protection. Schedule shut down periods so that the clearwell is not drawn down to lower than the specified level

.2 A maximum of two process trains can be taken off-line at any one time.

2. PRODUCTS

2.1 Owner Supplied Products

.1 The District of Summerland has pre-ordered the following equipment from Wolseley Canada in Kelowna;

3 - 750mm diameter AWWA flanged butterfly valves
6 - 750mm dia. s/s NBG set with flange tyte gaskets
3 - adjustable pipe supports
6 - 750mm dia Victaulic depend-o-lok gaskets

.2 Material supplier contact is:

Dave Scherck
Sales Representative
dave.scherck@wolseleyinc.ca

WOLSELEY

Wolseley Canada Inc. | waterworks
2960 Acland Road, Kelowna BC V1X 7X1 Canada
T 250-765-5186 C 250-870-6620 F 250-765-5187

2.2 Contractor Supplied Products

.1 Provide 750mm diameter blind flange, c/w gasket(s) and bolts (maximum of two) to seal off supply wet well from pump room;

.2 Provide all miscellaneous items not specifically identified in the Owners Supplied Products list to provide a complete installation.

3. EXECUTION (NOT APPLICABLE)

END OF SECTION

Part 1 GENERAL

1.1 Section Includes

.1 Coordination Work with other contractors and work by Owner under administration of Consultant.

.2 Scheduled progress meetings.

1.2 Coordination

.1 Perform coordination of progress schedules, submittals, use of site, temporary utilities, construction facilities and construction Work, with progress of Work of other contractors, under instructions of the Consultant.

1.3 Project Meetings

.1 It is expected that two project meetings will be required for the work, one at start-up and one midway through the construction.

.2 Meeting is to be held at the Summerland Water Treatment Plant.

.3 Consultant will record and document meeting and required actions resulting from the meetings.

1.4 Start Up Meeting

.1 Within ten (10) days after award of Contract, request a meeting of parties in contract to discuss and resolve administrative procedures and responsibilities.

.2 Consultant, Senior representatives of the Owner, Contractor, and WTP Supervisor are to be in attendance.

.3 Establish time for meeting and notify parties concerned minimum five (5) days before meeting.

.4 Incorporate mutually agreed variations to Contract Documents into Agreement, prior to signing.

.5 Agenda to include following:

- .1 Appointment of official representative of participants in Work.
- .2 Schedule of Work, progress scheduling as specified.
- .3 Proposed changes, change orders, procedures, approvals required, mark-up percentages permitted, time extensions, overtime, and administrative requirements.
- .4 Owner-furnished Products.
- .5 Take-over procedures, acceptance, and warranties.
- .6 Monthly progress claims, administrative procedures, photographs, and holdbacks.
- .7 Insurances and transcript of policies.

.6 Comply with instructions of Consultant for use of temporary utilities and construction facilities.

.7 Coordinate field engineering and layout work with Consultant.

1.5 On-Site Documents

.1 Maintain at job site, one copy each of the following:

.1 Contract Drawings.
.2 Specifications.
.3 Addenda.
.4 Reviewed shop drawings.
.5 Copy of approved Work Schedule.
.6 Manufacturers' installation and application instructions.

1.6 Schedules

.1 Submit preliminary construction progress schedule as specified to Consultant coordinated with Consultant's project schedule.

.2 After review, revise and resubmit schedule to comply with revised project schedule.

.3 During progress of Work revise and resubmit as directed by Consultant.

1.7 Construction Progress Meetings

.1 During course of Work, schedule progress meetings monthly or as requested by the Consultant.

.2 Notify parties minimum 7 days prior to meetings.

.3 Consultant will record minutes of meetings and circulate to attending parties and affected parties not in attendance within 5 days after meeting.

.4 Agenda to include following:

.1 Review of Work progress since previous meeting.
.2 Field observations, problems, conflicts.
.3 Problems which impede construction schedule.
.4 Review of off-site fabrication delivery schedules.
.5 Revision to construction schedule.
.6 Progress schedule, during succeeding work period.
.7 Review site safety and security issues.
.8 Other business.

1.8 Close-out Procedures

.1 Notify Consultant when Work is considered ready for Substantial Performance.

.2 Accompany Consultant on preliminary inspection to determine items listed for completion or correction.

.3 Comply with Consultant's instructions for correction of items of Work listed in executed certificate of Substantial Performance and for access to Owner-occupied areas.

.4 Notify Consultant of instructions for completion of items of Work determined in Consultant's final inspection.

END OF SECTION

1. GENERAL

1.1 Intent

.1 This section describes general requirements for process, and electrical equipment relating to supply, installation, testing, and commissioning; and the verification thereof.

1.2 Definitions

.1 Manufacturer: The manufacturer is the person, partnership, or corporation responsible for the fabrication of equipment provided to the Contractor for the completion of the Work.

.2 Manufacturer's Representative: A Manufacturer's Representative is a trained serviceman empowered by the Manufacturer to provide installation, testing, and commissioning assistance to the Contractor in his performance of these functions.

1.3 Expertise and Responsibility

.1 The Consultant recognizes the expertise of the Manufacturers.

.2 Should the Consultant issue an Addendum, Field Order, Change Order, or Instruction to change the Work which would, in the opinion of the Contractor, compromise the success or safety of the Work, then it shall be incumbent on the Contractor to notify in writing the Consultant to this effect within two (2) days.

1.4 Equipment Delivery

.1 The Contractor shall be responsible for receiving, unloading, and storage of equipment.

.2 The Contractor shall ensure that he has fully informed himself of precautions to be taken in transport of equipment and its subsequent storage.

.3 The Contractor shall inspect the contents of any equipment delivery to satisfy himself of the contents thereof and damage which may have occurred during transport.

1.5 Installation Assistance

.1 Before commencing installation of equipment, where indicated in the specifications, the Contractor shall correspond with the Manufacturer's Representative to provide instructions in the methods, techniques, precautions, and any other information relevant to the successful installation of the equipment.

1.6 Installation

.1 If necessary, or if so directed by the Consultant during the course of installation, the Contractor shall contact the Manufacturer to receive clarification of installation procedures, direction, or any other additional information necessary to continue or complete the installation in an appropriate manner. Document the correspondence.

1.7 Operation and Performance Verification

.1 Equipment will be subjected to a demonstration, running test, and performance tests after the installation has been verified and any identified deficiencies have been remedied.

.2 The Contractor shall inform the Consultant at least three (3) days in advance of conducting the tests. The tests may be concurrent with the inspection of satisfactory installation if mutually agreed by the Contractor and the Consultant.

.3 The Contractor shall then operate the equipment to demonstrate to the Consultant and Owner the operation of the equipment and any required ancillary services. Any remedial measures required to ensure satisfactory operation shall be promptly undertaken.

.4 On successful completion of the demonstration, running test, and performance tests, Form 103 attached to this specification will be signed by the Manufacturer's Representative, Contractor, and the Consultant.

1.8 Operator Training

.1 Operator training will consist of demonstration of any special features that are not standard to the WTP operators;

.2 Literature from the valves is to be provided to the WTP staff for insertion into the Summerland WTP Operations and Maintenance manuals.

CERTIFICATE OF EQUIPMENT SATISFACTORY PERFORMANCE

FORM 103

We certify that the equipment listed below has been operated for at least seven (7) days of which the last two (2) days are consecutive and that the equipment operates satisfactorily and meets its specified operating criteria. No defects in the equipment were found. The equipment is therefore classed as "conforming".

PROJECT: _____

ITEM OF EQUIPMENT: _____

TAG NO: _____

REFERENCE SPECIFICATION: _____

MANUFACTURER'S REPRESENTATIVE	DATE
CONTRACTOR'S REPRESENTATIVE	DATE
CONSULTANT	DATE

END OF SECTION

THIS PAGE IS INTENTIONALLY LEFT BLANK

1. GENERAL

1.1 Section Includes

.1 Administrative procedures preceding preliminary and final inspections of the Work.

1.2 Inspection & Declaration Procedures

.1 Contractor's Inspection: Contractor and all Subcontractors shall conduct an inspection of the Work, identify deficiencies and defects; repair as required to conform to Contract Documents. Notify Consultant in writing of satisfactory completion of Contractor's Inspection and that corrections have been made. Request a Consultant's Inspection.

.2 Consultant's Inspection: Consultants and Contractor will perform an inspection of the Work to identify obvious defects or deficiencies. Contractor shall correct Work accordingly.

.3 Completion: submit a written certificate that following have been performed:

.1 Work has been completed and inspected for compliance with Contract Documents;

.2 Defects have been corrected and deficiencies have been completed;

.3 Equipment and systems have been tested, adjusted and balanced and are fully operational;

.4 Certificates required by various Approving Authorities have been submitted;

.5 Operation of systems have been demonstrated to Owner's personnel; and

.6 Work is complete and ready for Final Inspection.

.4 Final Inspection: when items noted above are completed, request a final inspection of the Work by Owner, Consultants, and Contractor. If Work is deemed incomplete by and Consultant, complete outstanding items and request a re-inspection.

.5 Declaration of Substantial Performance: when the Consultants consider deficiencies and defects have been corrected and it appears requirements of Contract have been substantially performed, make application for certificate of Substantial Performance. Refer to General Conditions for specifics to application.

.6 Commencement of Lien and Warranty Periods: date of Owners acceptance of submitted declaration of Substantial Performance shall be date for commencement for warranty period and commencement of lien period unless required otherwise by lien statute of the Place of the Work.

.7 Declaration of Total Performance: when Consultant consider final deficiencies and defects have been corrected and it appears requirements of Contract have been totally performed, make application for certificate of Total Performance. Refer to General Conditions for specifics to application. If Work is deemed incomplete by Consultant, complete outstanding items and request re-inspection.

.8 Final Payment: following completion of lien period, submit claim for final payment in accordance with General Conditions.

1.3 Re-inspection

.1 Should status of the Work require re-inspection by Consultant due to failure of Work to comply with Contractor's claims for inspection, Owner will deduct amount of Consultant's compensation for re-inspection services from payment to Contractor.

2. PRODUCTS (NOT APPLICABLE)

3. EXECUTION (NOT APPLICABLE)

END OF SECTION

APPENDIX A
Section Drawing

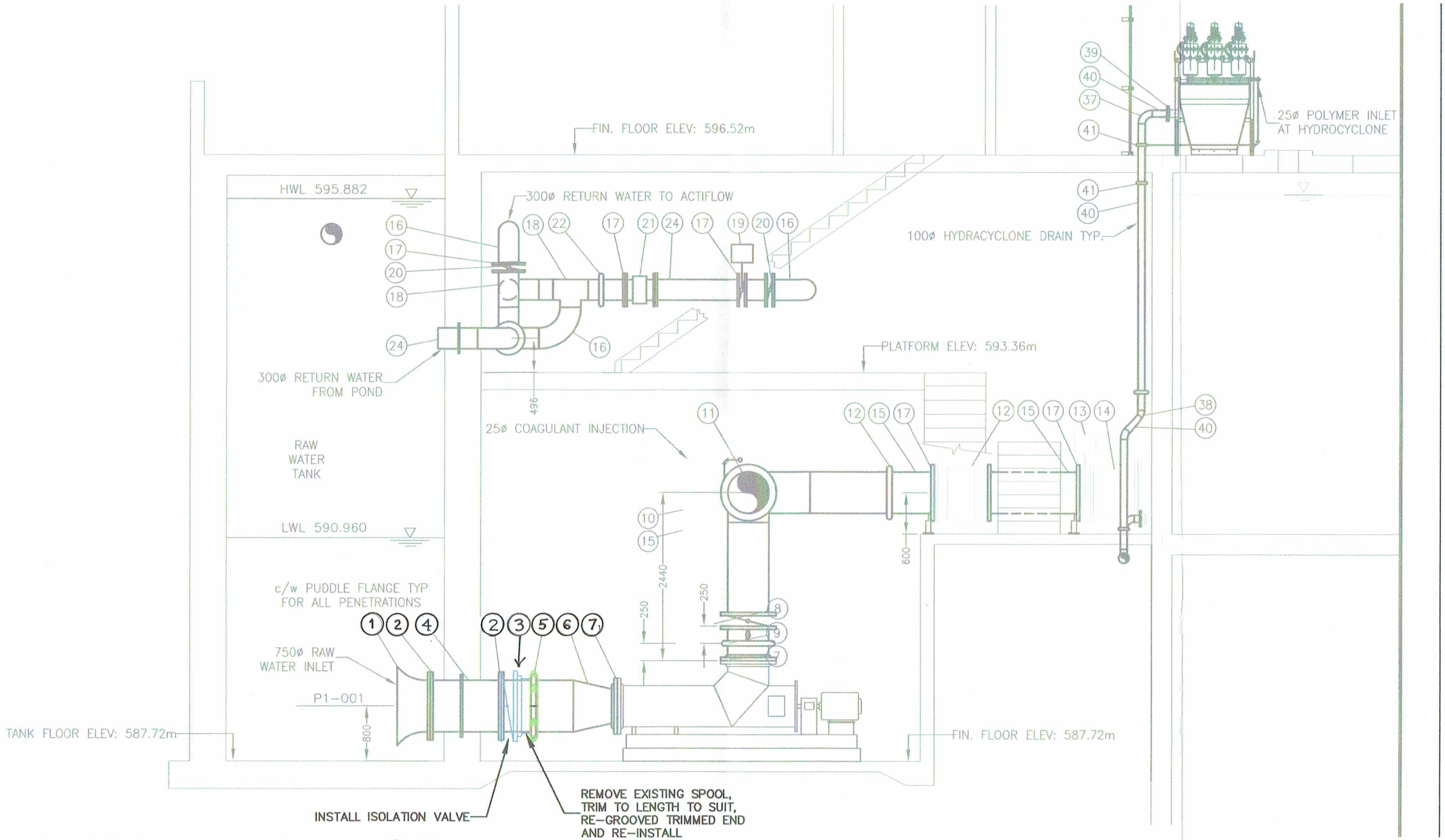

- ITEMS 1,2,4-7 REFER TO USL DRAWING P-03
- ITEM 3 750 mm AWWA BUTTERFLY VALVE c/w FABRICATED SCH.10 S/S SPOOL.

NOTE:
BASE DRAWING FROM RECORD DRAWINGS BY URBAN SYSTEMS

FIGURE 1
OPTION 1 - DRY SIDE INSTALLATION
N.T.S.

Agua Consulting Inc.
"Engineered Water Solutions"

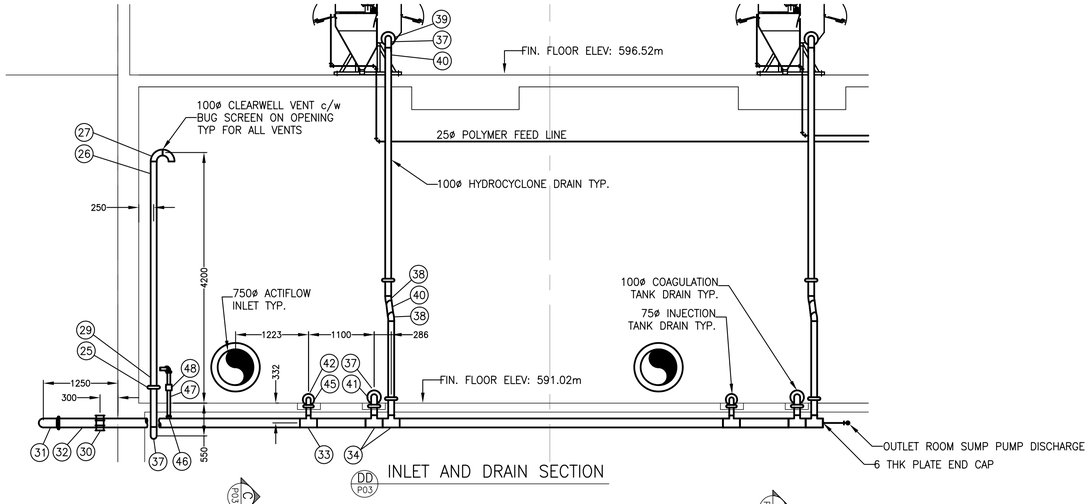

INLET AND DRAIN SECTION (DD P03)

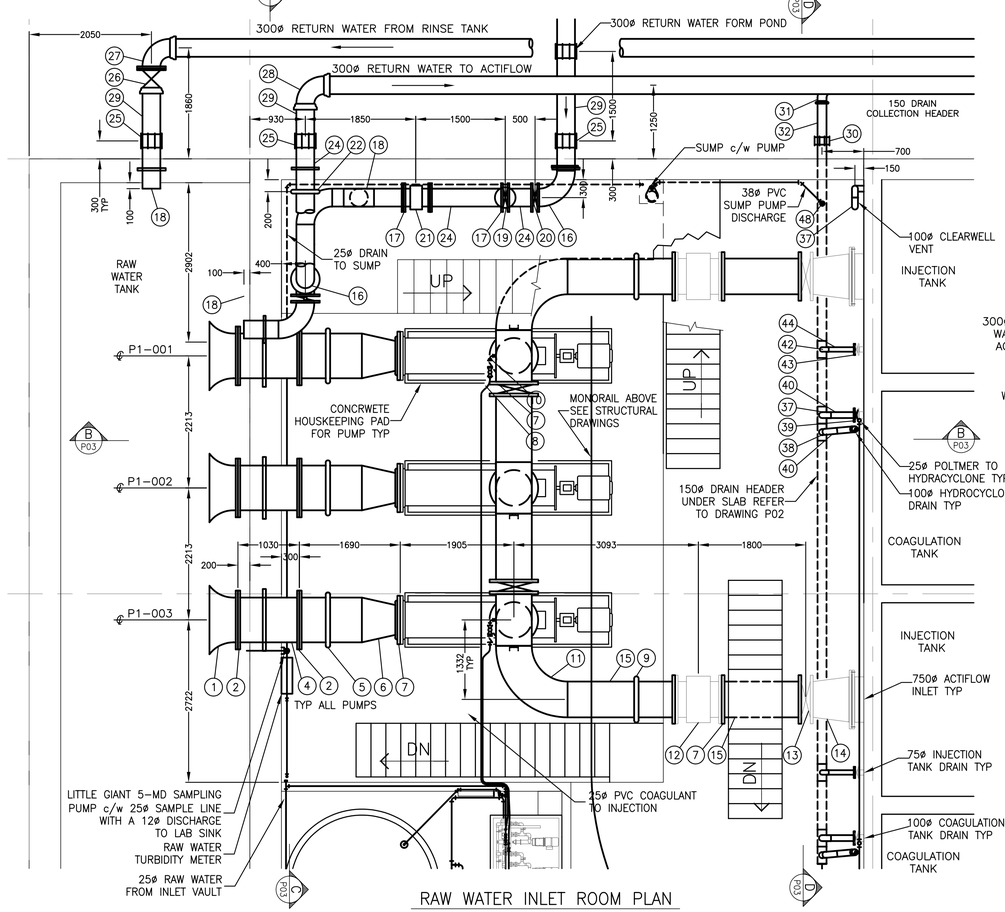

RAW WATER INLET ROOM PLAN

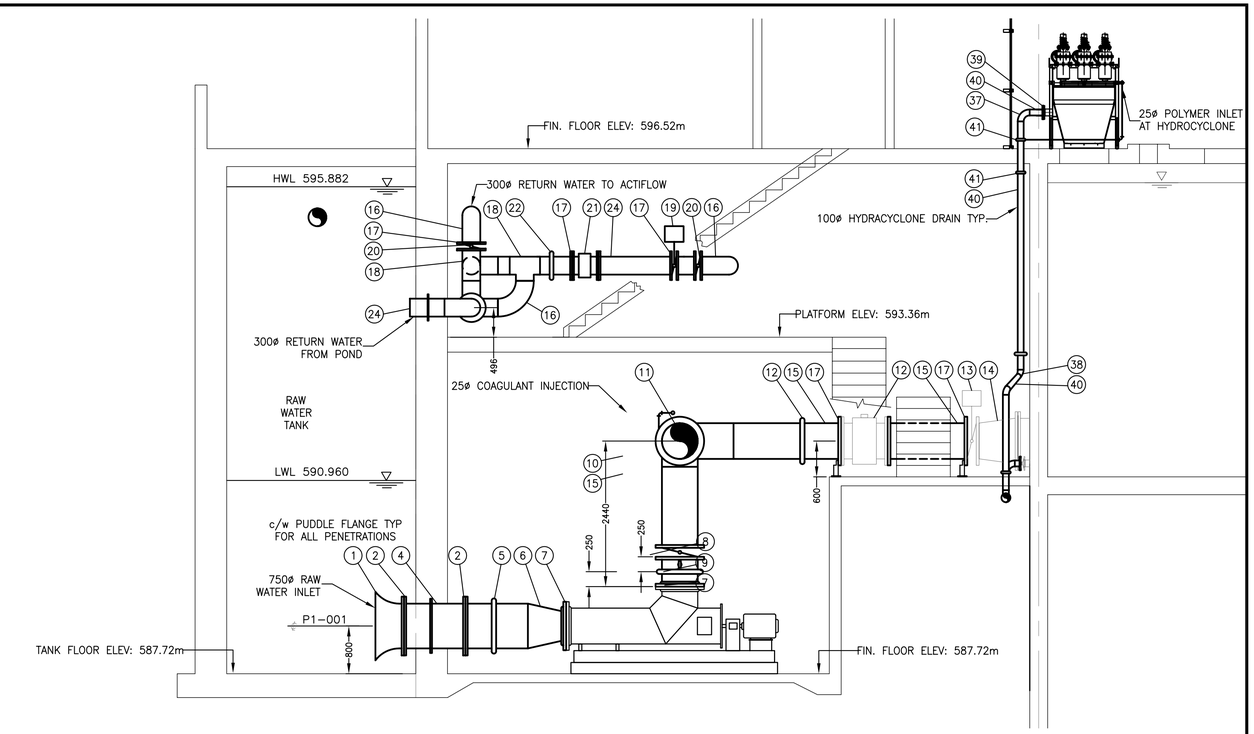

RAW WATER INLET SECTION (BB P03)

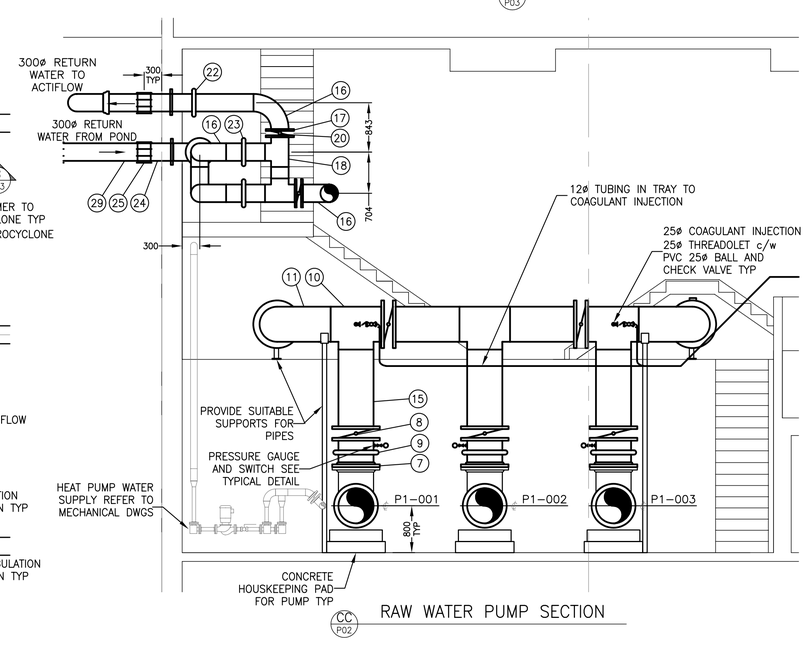

RAW WATER PUMP SECTION (CC P02)

MATERIAL LIST

No	SIZE	DESCRIPTION
1.	750	BELLMOUTH DI FLANGED
2.	750	FLANGE 150# SLIP ON
3.	–	NOT USED
4.	750	PIPE SCH 10 STAINLESS STEEL
5.	750	GROOVED COUPLING
6.	750x600	CONCENTRIC REDUCER SCH 10 STAINLESS STEEL
7.	600	FLANGE 150# SLIP ON
8.	600	BUTTERFLY VALVE c/w HAND OPERATOR
9.	600	GROOVED COUPLING
10.	600	TEE SCH 10 STAINLESS STEEL
11.	600	90° ELBOW LONG RADIUS SCH 10 STAINLESS STEEL
12.	600	MAGNETIC FLOW METER (SUPPLIED BY JMI)
13.	600	BUTTERFLY VALVE FLANGED c/w AIR OPERATOR (SUPPLIED BY JMI)
14.	750x600	CONCENTRIC REDUCER SCH 10 STAINLESS STEEL (SUPPLIED BY JMI)
15.	600	PIPE SCH 10 STAINLESS STEEL
16.	300	90° ELBOW LONG RADIUS SCH 10 STAINLESS STEEL
17.	300	FLANGE 150# SLIP ON
18.	300	TEE SCH 10 STAINLESS STEEL
19.	300	BUTTERFLY VALVE c/w ELECTRIC OPERATOR
20.	300	BUTTERFLY VALVE c/w HAND OPERATOR
21.	300	MAGNETIC FLOW METER
22.	300	GROOVED COUPLING
23.	–	NOT USED
24.	300	PIPE SCH 10 STAINLESS STEEL
25.	300	TRANSITION COUPLING STLxPVC
26.	300	GATE VALVE RESILIENT WEDGE FxH
27.	300	90° BEND DI FxH c/w RESTRAINERS
28.	300	90° BEND PVC HxH c/w RESTRAINERS
29.	300	PIPE PVC DR25 WATERMAIN
30.	150	TRANSITION COUPLING STLxPVC
31.	150	90° BEND PVC HxH c/w RESTRAINERS
32.	150	PIPE PVC DR25 WATERMAIN
33.	150x75	REDUCING TEE SCH 10 STAINLESS STEEL
34.	150x100	REDUCING TEE SCH 10 STAINLESS STEEL
35.	150	GROOVED COUPLING
36.	150	PIPE SCH 10 STAINLESS STEEL
37.	100	90° ELBOW LONG RADIUS SCH 10 STAINLESS STEEL
38.	100	45° ELBOW LONG RADIUS SCH 10 STAINLESS STEEL
39.	100	FLANGE 150# SLIP ON
40.	100	PIPE SCH 10 STAINLESS STEEL
41.	100	GROOVED COUPLING
42.	75	90° ELBOW LONG RADIUS SCH 10 STAINLESS STEEL
43.	75	FLANGE 150# SLIP ON STAINLESS STEEL
44.	75	PIPE SCH 10 STAINLESS STEEL
45.	75	GROOVED COUPLING
46.	50	THREADOLET STAINLESS STEEL
47.	50	PIPE SCHEDULE 80 STAINLESS STEEL c/w THREADED ENDS
48.	50	THREADED COUPLING

ISSUED FOR RECORD
2008-06-20
URBANSYSTEMS.

No.	Date	By	Revision	Chk'd
4	2008/06/20	TP	RECORD DRAWING	SB
3	2006/07/10	TP	ISSUED FOR CONSTRUCTION	SB
2	2006/03/28	TP	ISSUED FOR TENDER	SB
1	2005/10/17	TP	ISSUED FOR REVIEW	PG

Drawn: TP
Design: PG
Approved: PG
Date: 2005/07/22
Scale: 1:50

URBANSYSTEMS.
Suite 500 – 1708 Dolphin Ave.
Kelowna, B.C. V1Y 9S4
Tel: (250) 762-2517
Fax: (250) 763-5266

DISTRICT OF SUMMERLAND
WATER TREATMENT PLANT

RAW WATER INLET AREA
PLAN AND SECTIONS

Project No. 0872-0046-02
Drawing No. P03
Rev. No. 4

U:\Projects_KEL\0872\0046\03\D-Drafting\CADD\dwg\Record\P00-0872004602.dwg, P03, 2008/07/14 10:52 am tpurcer

APPENDIX B
Owner Supplied Materials Submittals

WOLSELEY
Waterworks Group

2960 Acland Road
Kelowna, BC
Office: (250) 765-5186
Fax: (250)765-5187

~ QUOTATION ~

Quote No: 1

Job Name: **SUMMERLAND WTP**
Date: **OCT 6/17**
Location: **SUMMERLAND**
Replying to: **BOB**
Close:

ITEM #	DESCRIPTION	QTY	Per	Unit Cost	Unit Cost c/w PST	TOTAL
1,2	750mm FXF valmatic butterfly valve w/gear op & hand wheel	3	EA			
3,4	750mm ss nbg set w/flange tyte gasket	6	EA			
5.0	adjustable pipe support	3	EA			
6.0	750mm vic depend-o-lok gaskets	3	EA			
	GST EXTRA - FOB JOBSITE					
				Total Page		

IT IS THE POLICY OF THIS COMPANY TO REPLACE AT AN AGREED POINT OF DELIVERY ANY MATERIAL FOUND DEFECTIVE, OR WHICH DOES NOT CONFORM TO SPECIFICATIONS UPON WHICH ORDER IS ACCEPTED AND SHIPMENT MADE. IN THE CASE OF DEFECTIVE MATERIAL, THE MEASURE OF DAMAGE IS THE PRICE OF THE DEFECTIVE MATERIAL ONLY AND WE WILL NOT BE RESPONSIBLE FOR THE LABOUR CLAIMS OR ANY CHARGES BEYOND THE VALUE OF THE DEFECTIVE MATERIAL.

MATERIAL QUOTED SHOULD BE VERIFIED BY BUYER AS CONFORMING TO ANY APPLICABLE SPECIFICATIONS (AND/OR) QUANTITES.

IN THE EVENT OF DISPUTE, WOLSELEY WATERWORKS GROUP WILL ONLY BE OBLIGATED TO FURNISH QUANTITIES AND MATERIAL LISTED ABOVE.

WOLSELEY WATERWORKS GROUP SHALL NOT BE RESPONSIBLE FOR MISINTERPRETATION OF SPECIFICATIONS AFTER MAKING A BONAFIDE EFFORT; RESPONSIBLE FOR ERRORS OR OMISSIONS.

CONDITIONS OF SALE

ALL AGREEMENTS ARE CONTINGENT UPON ACCIDENTS, STRIKES OR DELAYS ARISING FROM CAUSES BEYOND OUR CONTROL.

ALL QUOTATIONS, UNLESS INDICATED OTHERWISE, ARE PRICED AS BEING F.O.B. OUR PLANT AND ARE SUBJECT TO ACCEPTANCE WITHIN 30 DAYS FROM DATE OF QUOTATION

WOLSELEY WATERWORKS GROUP

PER: **Dave Scherck**

Agua Consulting Inc.
"Engineered Water Solutions"

SHOP DRAWING REVIEW

Received Date: OCT 30. 2017
Reviewed by: R. HRASKO
Phone 250-212-3266
Comments: NO EXCEPTIONS NOTED

NOTE:
FOR OPEN RIGHT ROTATION,
BEVEL GEAR REQUIRED.
SEE DRWG. NO.
VM-2030/LSR

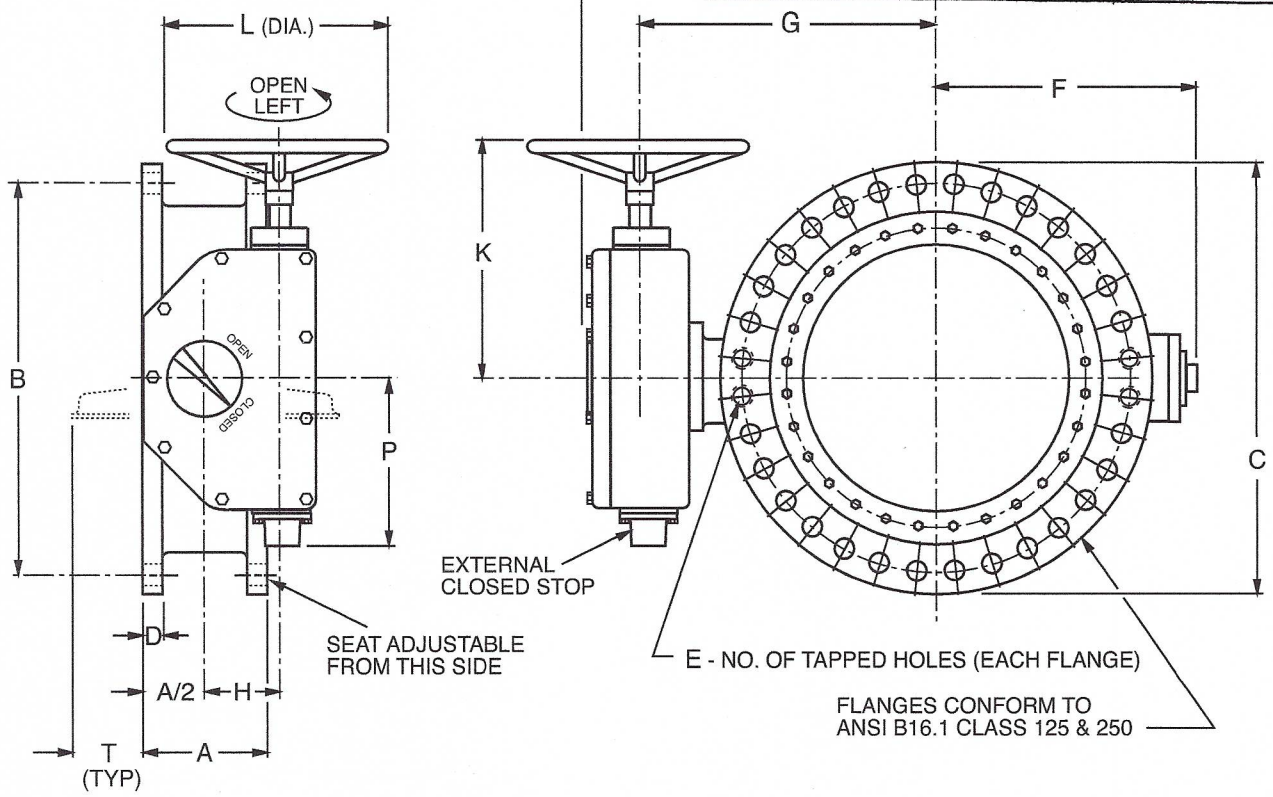

COLD WORKING PRESSURE 150 PSI (150B) 250 PSI (250B)

DIMENSIONS, INCHES

VALVE SIZE	AWWA C504 CLASS	A	B	C	D	E Qty.	E Tap	E Deep	F	G	H	J	K	L	P	T	TURNS TO OPEN	NO. OF BOLTS	BOLT SIZE	ACTU-ATOR SIZE	SHPG WT. lb.
30	150B 250B	12.00 13.75	36.00 39.25	38.75 43.00	2.12 3.00	4	1 1/4-7 1 3/4-5	2.00 3.00	27.38	29.38	8.50	35.19	29.56	24.00	17.75	8.81 7.88	59.3	28	1 1/4 1 3/4	LS-5A	2190 2713

Revised 1-22-14

150B & 250B FLANGED BUTTERFLY VALVE WITH TRAVELING NUT ACTUATOR, HANDWHEEL, EXTERNAL CLOSE STOPS AND POSITION INDICATOR

DATE 3-8-11

VAL-MATIC® VALVE AND MANUFACTURING CORP.

DRWG. NO. VM-2030/LS

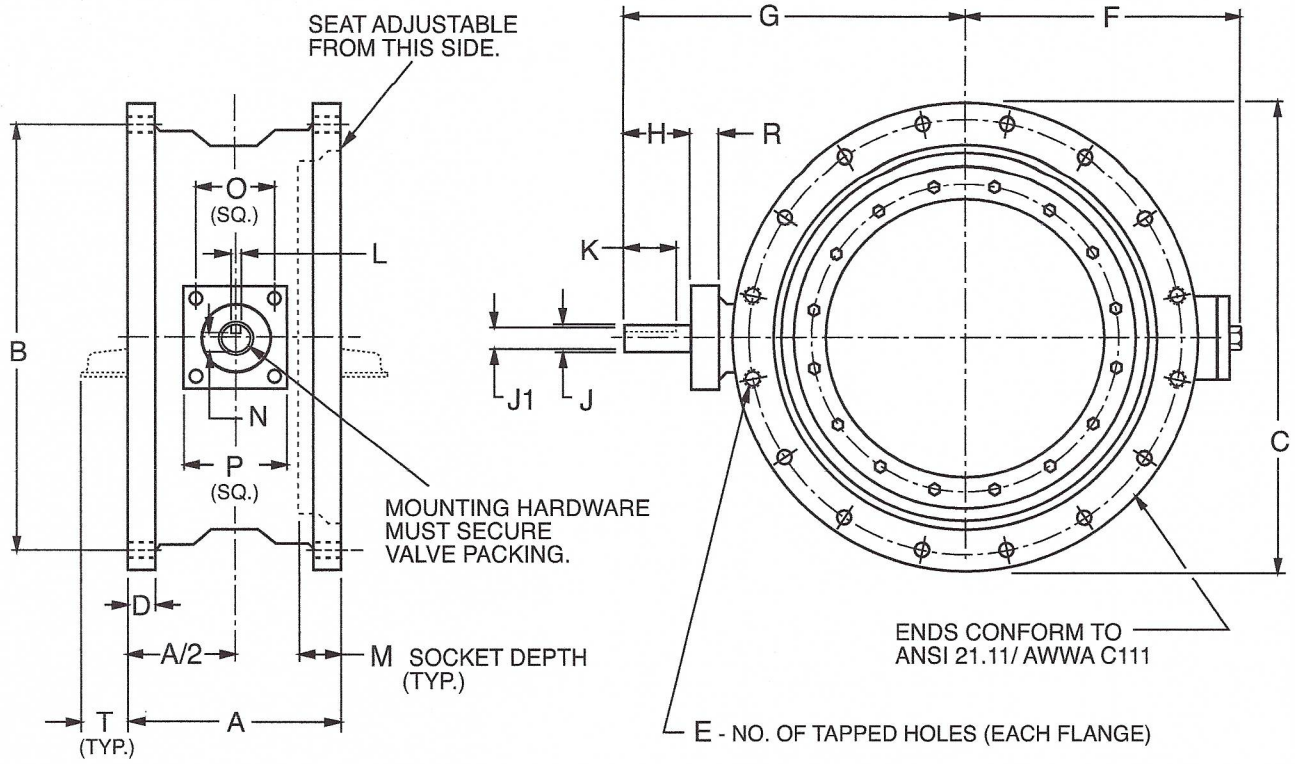

COLD WORKING PRESSURE 150 PSI (150B) 250 PSI (250B)

MECHANICAL JOINT DIMENSIONS, INCHES

VALVE SIZE	AWWA C504 CLASS	A	B	C	D	E	F	G	H	J	J1	K	L	M	N	O	P	PD*	R	T	NO. OF BOLTS	BOLT SIZE	SHPG. WT.
30	150B 250B	18.13	36.88	39.13	1.81	2	27.38	29.50	5.50	3.75	3.750 ±.003	4.44	.875	4	3.261	8.485	10.50	28.33	2.25	5.94	20	1	2021

PD = MINIMUM PIPE ID TO CLEAR BUTTERFLY VALVE DISC (CHAMFER PIPE ID AT 45° IF NECESSARY)

Revised 10-31-12

150B & 250B MECHANICAL JOINT BUTTERFLY VALVE WITH BARE STEM	DATE 3-5-07
VAL-MATIC® VALVE AND MANUFACTURING CORP.	DRWG. NO. VM-2130/BS

2/6

BUTTERFLY VALVE

30"- 72" SERIES 2000

STANDARD MATERIALS OF CONSTRUCTION

PART NO.	PART NAME	MATERIAL
1	BODY (CLASS 150B)	CAST IRON ASTM A126, CLASS B
2	BODY SEAT	STAINLESS STEEL ASTM A276, T316
3	DISC	DUCTILE IRON ASTM A536, GRADE 65-45-12
4	SHAFT (CLASS 150B) SHAFT (CLASS 250B)	STAINLESS STEEL ASTM A276, T304 STAINLESS STEEL ASTM A564, T630, H1150
5	SLEEVE BEARING	TEFLON LINED, FIBERGLASS BACKED
6	RESILIENT SEAT	BUNA-N
7	SEAT RETAINING RING	STAINLESS STEEL ASTM A743, GRADE CF8M
8	LOCKING CAP SCREWS	STAINLESS STEEL ASTM F593, T316 WITH NYLON PELLET
9	TAPER PIN	STAINLESS STEEL ASTM A582, T416
10	TAPER PIN O-RING	EPDM
11	TAPER PIN NUT	STAINLESS STEEL ASTM F594, T316
12	TAPER PIN WASHER	STAINLESS STEEL ASTM A276, T316
13	PACKING, V-TYPE	BUNA-N
14	KEY	CARBON STEEL
15	THRUST BEARING CAP	BRONZE ASTM B763, ALLOY C99500
16	CAP SCREWS	STAINLESS STEEL ASTM A276, T316
17	THRUST BEARING STUD	BRONZE ASTM B763, ALLOY C99500
18	THRUST PLATE	CAST IRON ASTM A126, CLASS B
19	THRUST PLATE BOLTS	CARBON STEEL (ZINC PLATED)
20	THRUST PLATE GASKET	NON-ASBESTOS COMPRESSED FIBER
21	LOCK CAP	CAST IRON ASTM A126, CLASS B
22	LOCK CAP BOLTS	CARBON STEEL (ZINC PLATED)
23	LOCK CAP GASKET	COMPRESSED NON-ASBESTOS FIBER
24	BODY O-RING	RESILIENT, ASTM D2000

NOTE: ALL SPECIFICATIONS AS LAST REVISED.

Revised 5-16-17

MATERIALS OF CONSTRUCTION	DATE 6-7-99
VAL-MATIC® VALVE AND MANUFACTURING CORP.	DRWG. NO. VM-2030-M

3/6

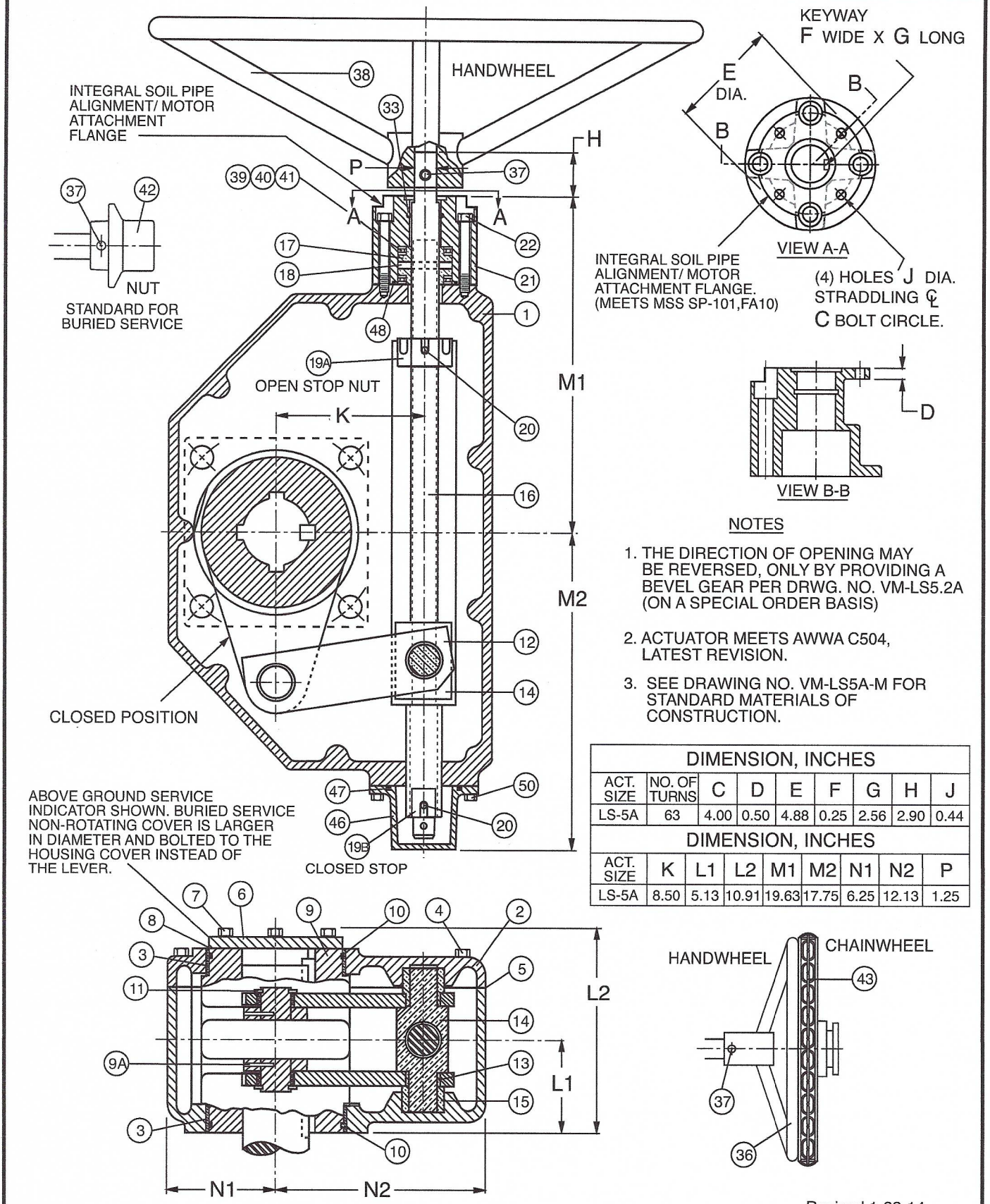

NOTES

1. THE DIRECTION OF OPENING MAY BE REVERSED, ONLY BY PROVIDING A BEVEL GEAR PER DRWG. NO. VM-LS5.2A (ON A SPECIAL ORDER BASIS)
2. ACTUATOR MEETS AWWA C504, LATEST REVISION.
3. SEE DRAWING NO. VM-LS5A-M FOR STANDARD MATERIALS OF CONSTRUCTION.

DIMENSION, INCHES								
ACT. SIZE	NO. OF TURNS	C	D	E	F	G	H	J
LS-5A	63	4.00	0.50	4.88	0.25	2.56	2.90	0.44

DIMENSION, INCHES								
ACT. SIZE	K	L1	L2	M1	M2	N1	N2	P
LS-5A	8.50	5.13	10.91	19.63	17.75	6.25	12.13	1.25

Revised 1-22-14

TRAVELING NUT ACTUATOR	DATE 8-22-08
VAL-MATIC® VALVE AND MANUFACTURING CORP.	DRWG. NO. VM-LS5A

4/6

TRAVELING NUT ACTUATOR

SIZE LS-5A

PART NO.	PART NAME	MATERIAL
1	HOUSING	CAST IRON ASTM A48, CLASS 40
2	HOUSING COVER	CAST IRON ASTM A48, CLASS 40
3	HOUSING & COVER BUSHING	TEFLON / FIBERGLASS BACKED
4	HOUSING COVER BOLTS	STAINLESS STEEL T316
5	HOUSING COVER GASKET	RTV SEALANT
6	INDICATOR SHAFT COVER (ABOVE GROUND SERVICE) NON-ROTATING SHAFT COVER (BURIED SERVICE)	CAST IRON ASTM A48, CLASS 40
7	SHAFT COVER BOLTS	STAINLESS STEEL T316
8	SHAFT COVER GASKET	RTV SEALANT
9	LEVER	DUCTILE IRON ASTM A536, GRADE 65-45-12
9A	LOCKING PIN	ALLOY STEEL
10	LEVER O-RING	BUNA-N
11	LEVER RETAINING RING	STEEL
12	LINK	STEEL
13	LINK BUSHING	TEFLON / FIBERGLASS BACKED
14	CROSSHEAD	BRONZE ASTM B124, ALLOY C67500
15	TRAVELING GUIDE	BRONZE ASTM B124, ALLOY C67500
16	OPERATOR STEM	HIGH TENSILE STEEL (NICKEL PLATED EXPOSED END)
17	STEM TRUST BEARING COLLAR	BRONZE ASTM B124, ALLOY C37700
18	STEM COLLAR PIN	STEEL
19	STOP NUT	STEEL
20	STOP NUT PIN	STEEL
21	END CAP (FOR SOIL PIPE ALIGNMENT OR MOTOR ATTACHMENT)	CAST IRON ASTM A48, CLASS 40
22	END CAP SOCKET HD. BOLTS	STAINLESS STEEL 17-4 PH
33	STEM O-RING	BUNA-N
36	HANDWHEEL (OPTIONAL)	CAST IRON
37	PIN	STEEL
39	BALL BEARINGS	STEEL
40	BEARING RACE	STEEL
42	OPERATING NUT (OPTIONAL FOR ABOVE GROUND SERVICE, STANDARD FOR BURIED SERVICE)	CAST IRON
43	CHAINWHEEL KIT (OPTIONAL)	DUCTILE IRON
46	STOP COVER	CAST IRON ASTM A48, CLASS 40
47	STOP COVER O-RING	BUNA-N
48	END CAP O-RING	BUNA-N
50	STOP COVER BOLTS	STAINLESS STEEL T316

NOTE: ALL SPECIFICATIONS AS LAST REVISED.

MATERIALS OF CONSTRUCTION

DATE 8/22/08

VAL-MATIC® VALVE AND MANUFACTURING CORP.

DRWG. NO. VM-LS5A-M

5/6

LIQUID EPOXY COATING
Devoe Bar-Rust 233H
or
Tnemec N140

General Description:

Liquid Epoxy is a two-part, low VOC, chemically cured, semigloss coating that is applied as a liquid to the sandblasted surface of a valve and then allowed to cure at room temperature. The result is a durable coating with exceptional abrasion and chemical resistance ideally suited for valves in water and wastewater applications.

Advantages of Epoxy:

1. The coating is applied in accordance with AWWA Standard C550 "Protective Interior Coatings for Valves and Hydrants" and certified to the requirements of ANSI/ NSF Standard 61 - "Drinking Water System Components - Health Effects" for coating valves and fittings.
2. Epoxy coatings are applied in a spray process in one or multiple-coats.
3. The spray process provides a smooth, even coating thickness with no runs, sags, or thin spots common when applying liquid paints.
4. Epoxy has a long-term performance history in water and sewage environments including salt water, slurries, methane and hydrogen sulfide exposure.

Application Process:

1. The valve is cleaned and sandblasted, prior to coating.
2. Epoxy is applied in a semi-automated manufacturing process in accordance with the coating manufacturers' procedures and industry standards to assure consistency and high quality.
3. The epoxy is allowed to cure at room temperature.
4. The final surface is visually and electrically (when specified) tested to verify thickness and that it is holiday free.

Typical Performance Characteristics:

1.	Color:	Black	
2.	Thickness:	4-6 mils	1 Coat
3.	Impact Resistance:	20 in-lb	ASTM D2794
4.	Moisture Permeability:	.07	ASTM E96
5.	VOC:	1.41 lbs/gal	EPA 24
6.	Service Temperature:	160° F. (250° F.)	Wet (Dry)
7.	Adhesion:	Excellent	ASTM D4541
8.	Abrasion:	Excellent	ASTM D4060
9.	Elongation:	Excellent	ASTM D522 Method B
10.	Water Immersion:	Excellent	ASTM D1308
11.	Chemical Resistance to:	Alkalis, salts, oils, greases, foodstuffs, 50% sodium hydroxide, 28% ammonia, 25% citric acid, 5% sodium chloride, 10% ammonium hydroxide, sewage.	

Revised 1-31-14

LIQUID EPOXY COATING	DATE 11-25-03
VAL-MATIC® VALVE AND MANUFACTURING CORP.	DRWG. NO. SS-1939

6/6

STANDON PIPE SUPPORT SUBMITTAL
MODEL S92 LARGE DIAMETER SADDLE SUPPORT
SIZES S9230 / 30" - THROUGH - S9248 / 48"

PRODUCT - Saddle support radiused for large diameter Ductile Iron piping systems.
Neoprene liner available for steel or PVC pipe installations.
Support base and collar act as retention collars for 6" Ductile Iron extension pipe.
This model also available in finished length version.

TESTING - This design has been tested to withstand in excess of a 50,000 pound static load.
Tensile strength of 3" threaded stud exceeds 350,000 pounds.
Minimum pipe to floor distance is 13" without revision.
Maximum installation height dependent on installation.

SPECIFICATIONS -

Saddle -	5" wide x 1" A36 steel flat bar formed to 120° diameters.
Stud -	7" long x 3" diameter, rolled thread.
Collar -	3" deep socket with 3" Heavy Hex nut.
Ext. pipe -	6" Ductile Iron pipe (supplied by installer)
Base -	15" x 15" x .5" with 4 - 1" anchor holes inset 1.5".
→ Finish -	Galvanized.
Optional -	All 304 Stainless Steel
Optional -	All 316 stainless Steel

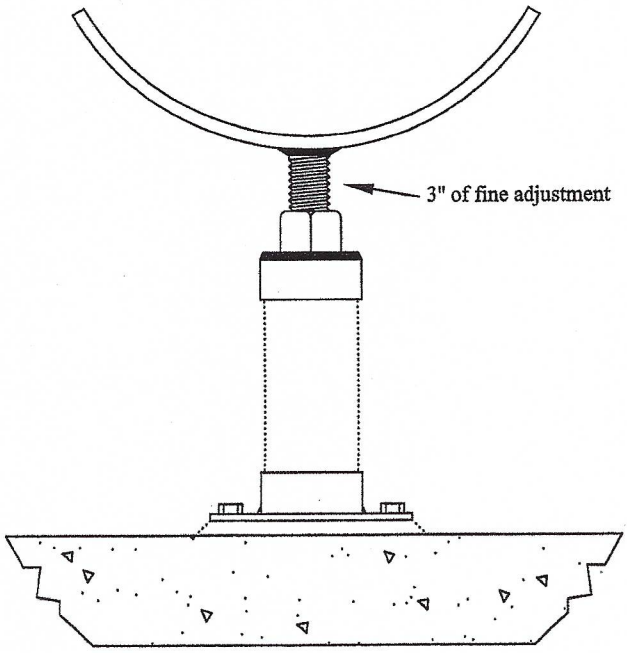

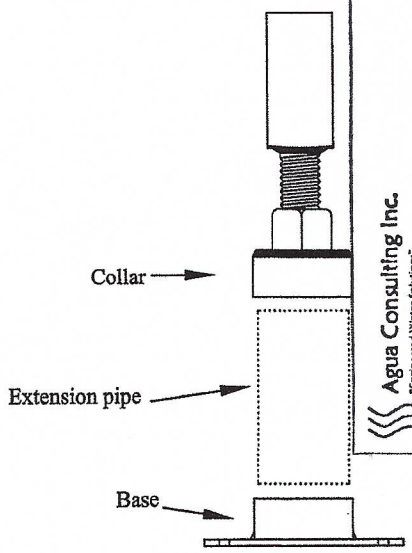

Agua Consulting Inc.
"Engineered Water Solutions"
SHOP DRAWING REVIEW
Received Date: OCT 30. 2017
Reviewed by: R. HRASKO
Phone 250-212-3266
Comments: NO EXCEPTIONS NOTED

MATERIAL RESOURCES INC.
HILLSBORO, OREGON
503-533-5256p, 503-533-5501f

For online information -
WWW.STANDON.NET